# PGD-100 - condensate pump, peristaltic, SR10/30, brush motor; complete

## General Description

## Technical data

| | |
|---|---|
| **Tubing material** | Novoprene |
| **Motor type** | brushed DC motor |
| **Operating voltage** | 12VDC |
| **max. Current** | 300 mA |
| **Free flow** | 55 ml/min |

## Drawings
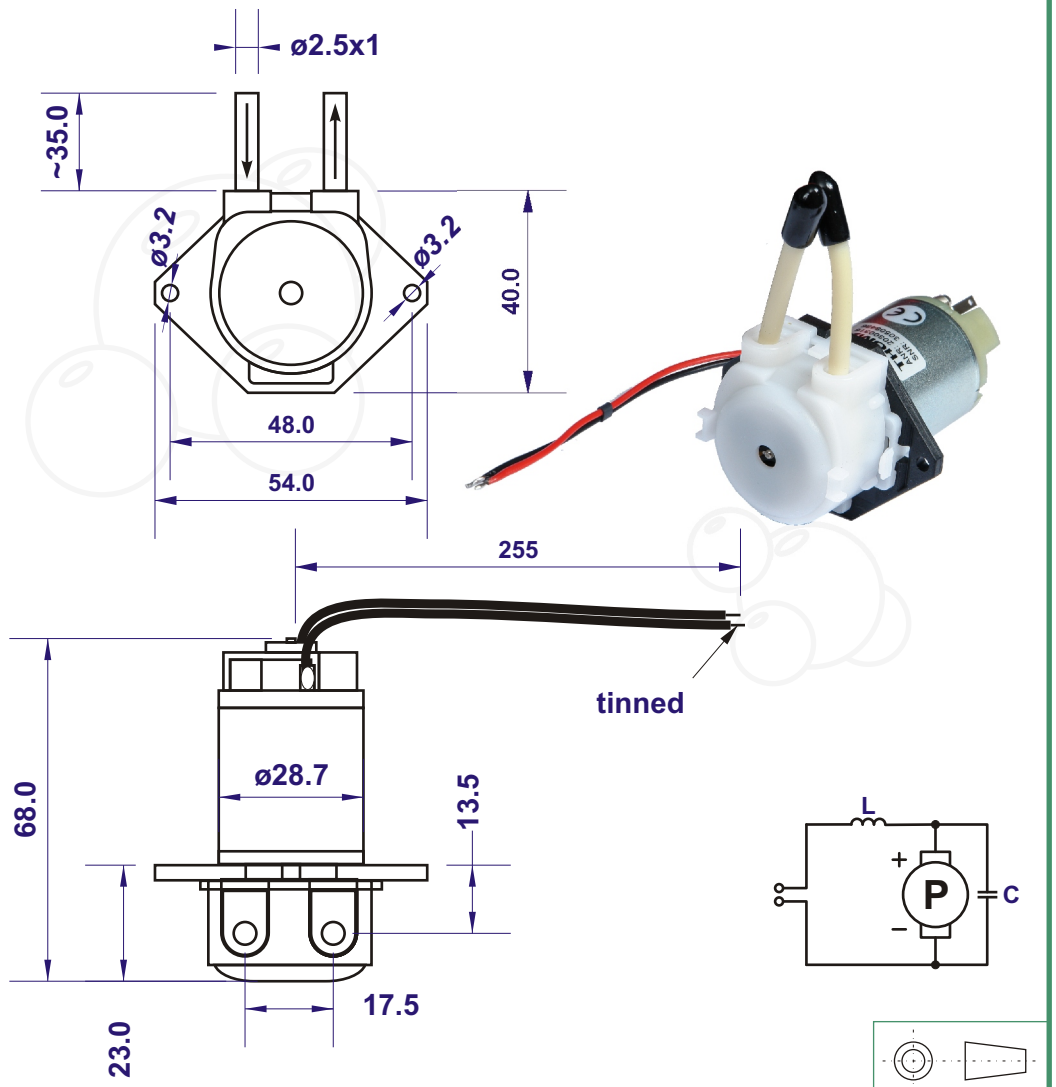
All dimensions in [mm]